© 2022TE Connectivity. All Rights Reserved.

REVISIONS					
P	LTR	DESCRIPTION	DATE	DWN	APVD
	A6	ECR-21-123594	27JAN2022	RK	JB

PN 1-1,2-1,3-1,4-1,5-1
1-9,2-9,3-9,4-9 & 5-9.

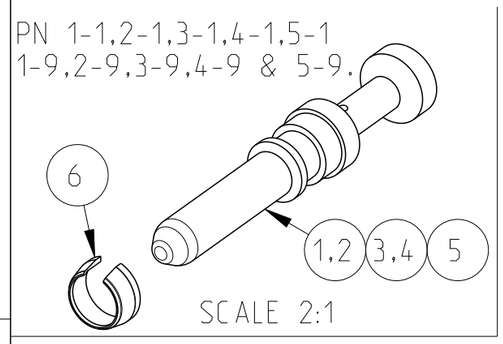

SCALE 2:1

12 OBSOLETE

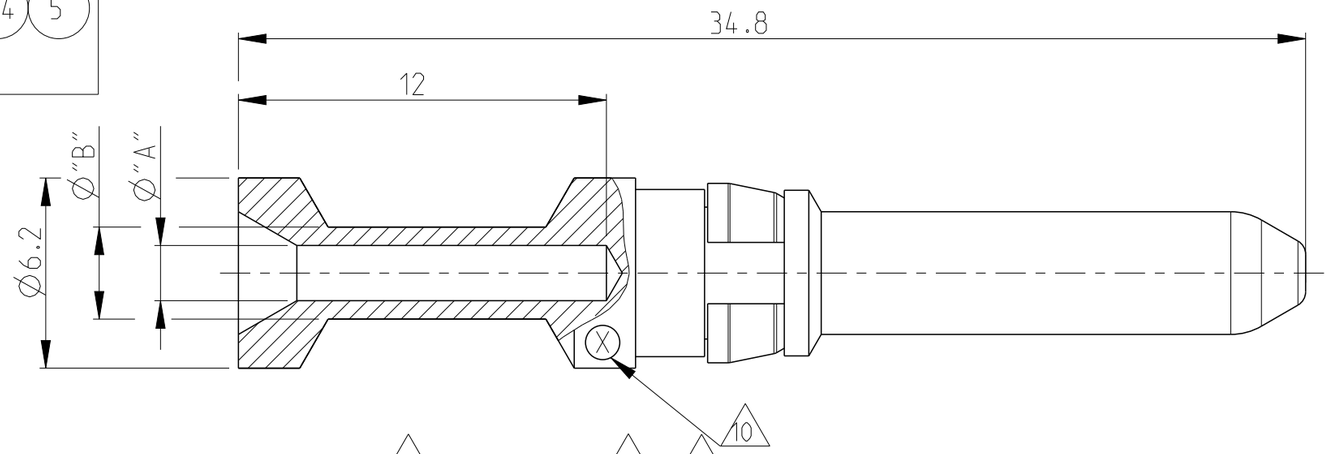

Notes

1. MATERIAL: BRASS
2. FINISH SILVER PLATING: 2 µm Ag MIN. OVER Cu
3. ASSEMBLY WEIGHT SEE TABLE, VOLUME: 479mm³ (APPROX.)
4. PACKAGING: 25 PIECES IN A POLY-BAG AND CARTON
5. SUITABLE SOCKET CONTACT: PN 1108756
6. SUITABLE INSERTS: SERIES HSK
7. SUITABLE CRIMPING TOOL: PN 1-1105850-8
8. SUITABLE INSERTION TOOL: PN 0-1102855-6
9. SUITABLE EXTRACTION TOOL: PN 0-1102855-8
10. CROSS-SECTION MARKING
11. STANDARDS: DIN EN 61984, DIN EN 60664-1

5-9	4-9	3-9	2-9	1-9	5-1	4-1	3-1	2-1	1-1	PLATING	DESCRIPTION	CROSS SECTION [MM²]	WEIGHT IN (Kg) 3	DIMENSIONS "A"	DIMENSIONS "B"	CROSS-SECTION MARKINGS 10	STRIPPING-LENGTH (MM)	ITEM NO
HS.K-C-Sti.Ag 10mm² 4	HS.K-C-Sti.Ag 6mm² 4	HS.K-C-Sti.Ag 4mm² 4	HS.K-C-Sti.Ag 2.5mm² 4	HS.K-C-Sti.Ag 1.5mm² 4	HS.K-C-Sti.Ag 10mm² 4	HS.K-C-Sti.Ag 6mm² 4	HS.K-C-Sti.Ag 4mm² 4	HS.K-C-Sti.Ag 2.5mm² 4	HS.K-C-Sti.Ag 1.5mm² 4	Ag 2	PIN CONTACT	10	0.0041	4.35	5.9	8	12	5
											PIN CONTACT	6.0	0.0041	3.5	4.9	7	12	4
											PIN CONTACT	4.0	0.0041	2.85	3.9	6	12	3
											PIN CONTACT	2.5	0.0039	2.2	3.2	5	12	2
											PIN CONTACT	1.5	0.0040	1.8	3.0	4	12	1
1	1	1	1	1	1	1	1	1	1	Ni	CLIP	-		-	-	-		6

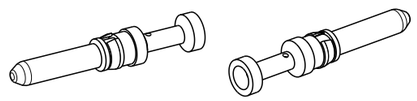

SCALE 1:1

THIS DRAWING IS A CONTROLLED DOCUMENT.

DIMENSIONS: mm

TOLERANCES UNLESS OTHERWISE SPECIFIED:
n. ISO 80
n. ISO 2768-mh-E
n. DIN 16901
0 PLC ±
1 PLC ±
2 PLC ±
3 PLC ±
4 PLC ±
ANGLES ±

MATERIAL 1

FINISH 2

DWN SCHWEIGER 03Mar2008
CHK H.BRAUN 03Mar2008
APVD T. SCHNURPFEIL 03Mar2008
PRODUCT SPEC 108-74004
APPLICATION SPEC 114-74003
WEIGHT -

TE Connectivity

NAME PIN CONTACT SERIES HSK

SIZE	CAGE CODE	DRAWING NO	RESTRICTED TO
A3	00779	C-1108757	-

CUSTOMER DRAWING | SCALE 5:1 | SHEET 1 OF 1 | REV A6

1470-19 (3/13)